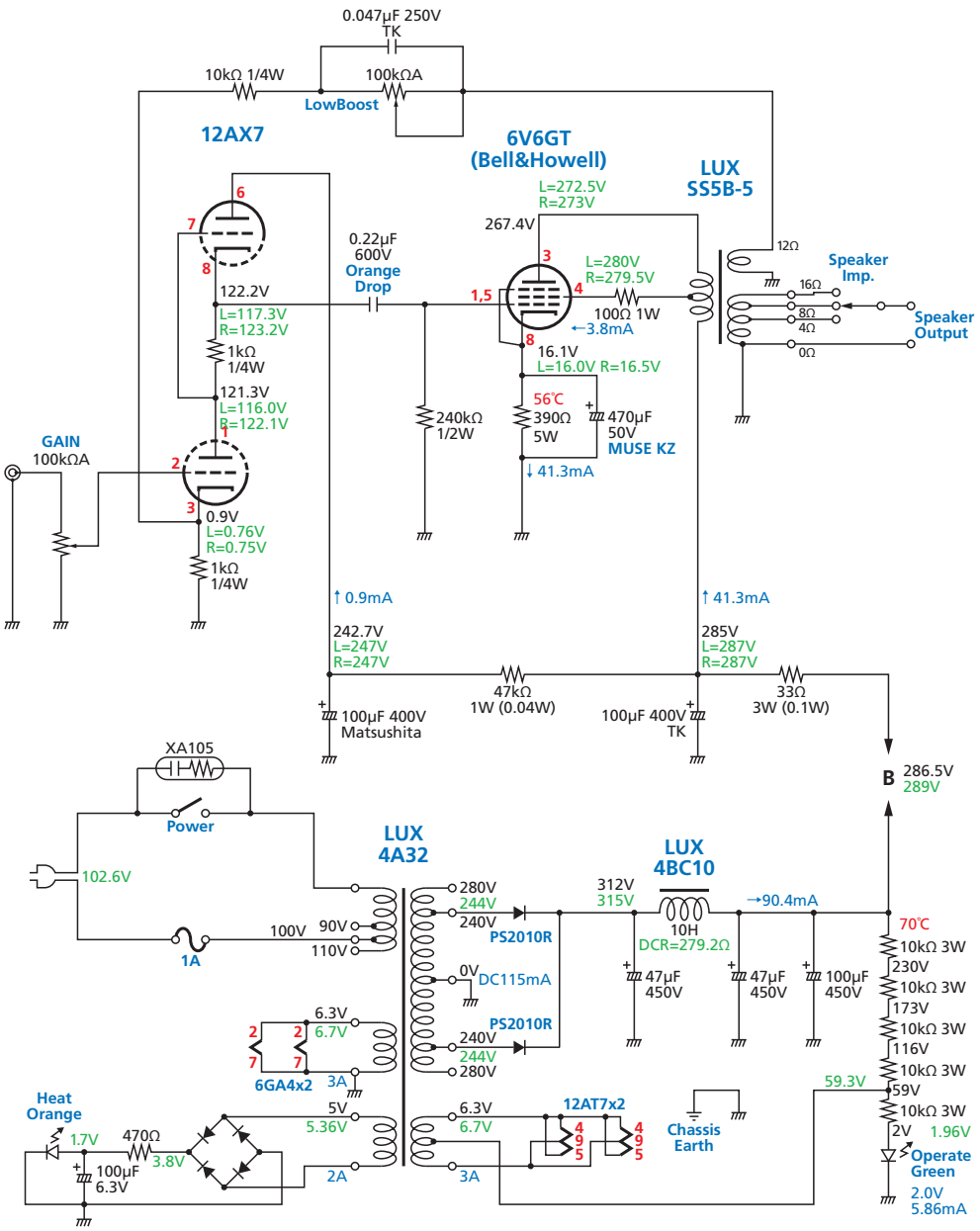

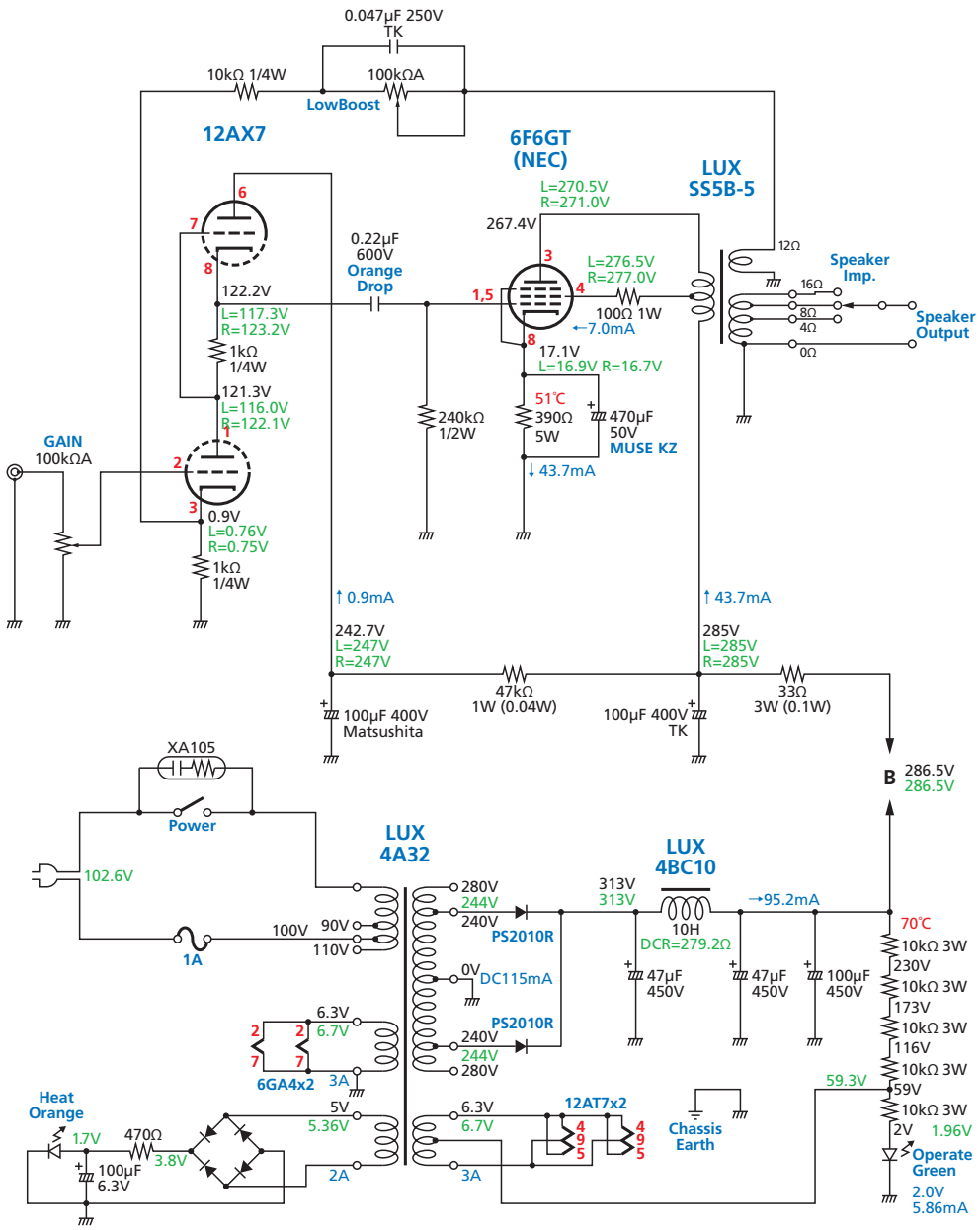

	Ploss	G2loss
6GA4 =	11.3W / 13W = 87%	-
6F6 =	9.2W / 11W = 84%	1.9W / 3.75W
6V6 =	9.4W / 12W = 78%	1.0W / 2.00W