EL34/6CA7

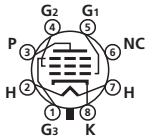

Eh=6.3V Ih=1.5A
Max Operating
Eb=800V Ploss=25W
Ec2=425V C2loss=8W
Rg1=700kΩ(both Fix and K)
Ehk+=100V Ehk-=100V

KT-88

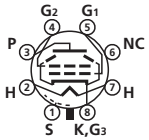

Eh=6.3V Ih=1.6A
Max Operating
Eb=600V Ploss=35W
Ec2=600V C2loss=6W
Ehk+=150V Ehk-=150V

6L6GC

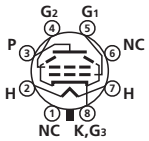

Eh=6.3V Ih=0.9A
Max Operating
Eb=500V Ploss=30W
Ec2=450V C2loss=5W
Ehk+=200V Ehk-=200V

EF86/6267

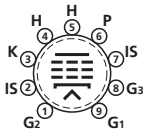

Eh=6.3V Ih=0.2A

Eb=	100V	250V	250V
Ib=	5.0mA	7.6mA	10.6mA
Ec2=	100V	125V	150V
Ic2=	2.1mA	3.0mA	4.3mA

Ec3=Connect to Kathode by Socket

Ec1=	-4.2V	-5.5V	-6.5V
rp=	500kΩ	1.5MΩ	1.0MΩ
gm=	3900μ	4500μ	5200μ
Rk=	150Ω	100Ω	68Ω

12BH7A

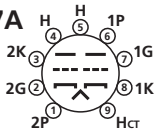
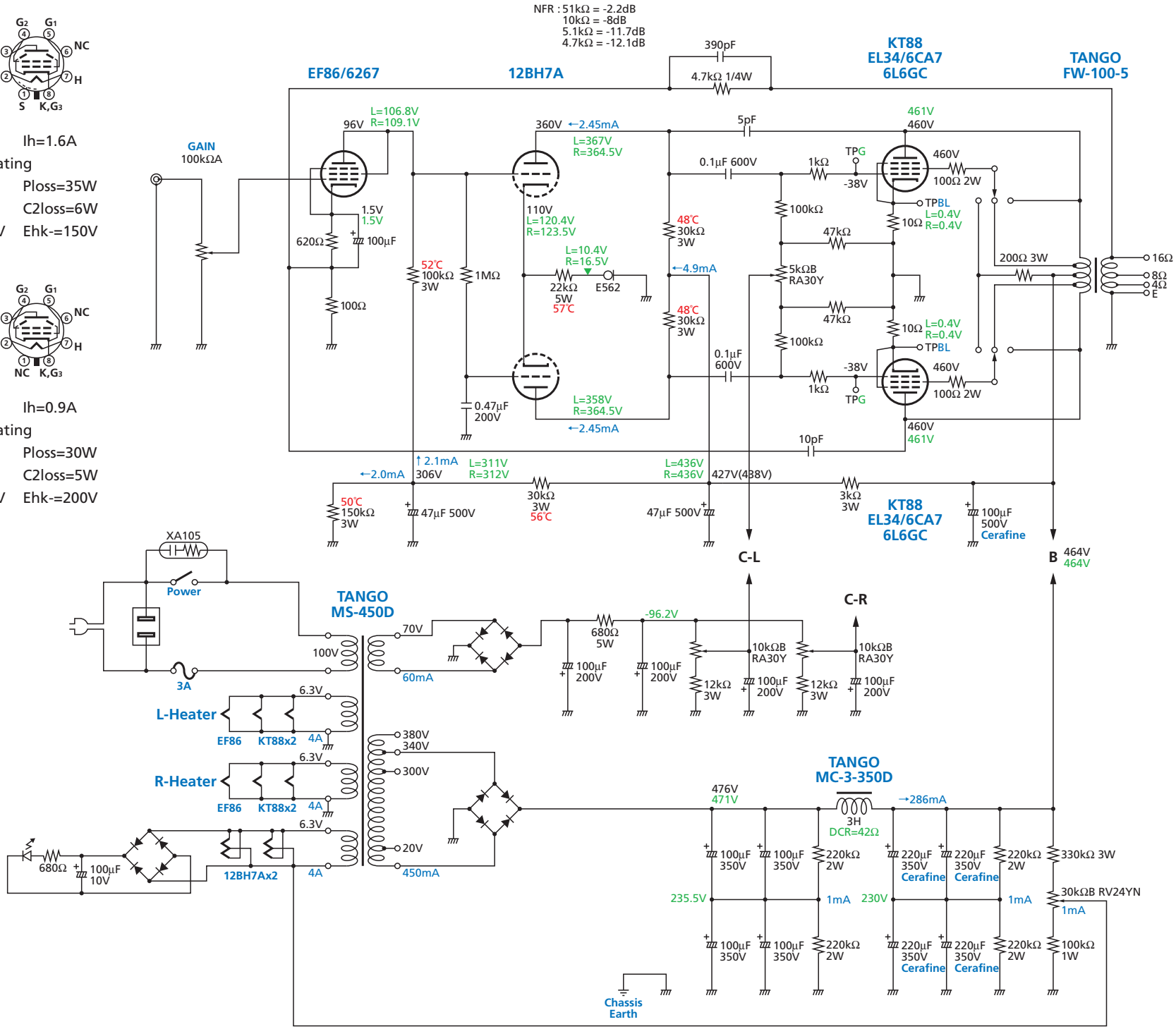
Eh=12.6V Ih=0.3A
6.3V 0.6A
Eb=250V Ib=11.5mA
Ec=-10.5V
gm=3100μ rp=5.3kΩ
μ=16.5
Ebmax=300V Ploss=3.5W
Ekmax=20mA