Marconi-PX25 (old)

Ef=4.0V If=2.0A
Ebmax=400V Ibmax=62.5mA
Ploss=25W (New=30W)
Rgmax=100kΩ (Fix) 250kΩ (Self)

Eb=400V
Ib=62.5mA
Ec1=-34V
(Rk=544Ω)
gm=7500μMo
μ= ---
rp=1265Ω
RL=3.2kΩ
Po=6W
KF=6%

WE-300B

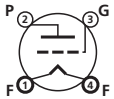

Ef=5.0V If=1.2A
Ebmax=400V Ibmax=100mA
Ploss=36W
Rgmax=50kΩ (Fix) 250kΩ (Self)

Eb=300V	350V
Ib=62--74mA	60--77mA
Ec1=-61V	-74V
(Rk=984Ω)	(Rk=1233Ω)
gm=5300μMo	5000μMo
μ=3.9	3.9
rp=740Ω	790Ω
RL=3kΩ	4kΩ
Po=6W	7W
KF=5%	5%

RCA-2A3

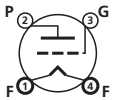

Ef=2.5V If=2.5A
Ebmax=300V Ploss=15W
Rgmax=50kΩ (Fix) 500kΩ (Self)

Eb=280V Ib=53mA
Ec1=-52V (Rk=981)
gm=4600μMo
μ=4.0 rp=870Ω
RL=3.5k Po=3.9W
KF=5%

Osram-ML4

Eh/Ih=4V/1A 6.0V/0.7A (ML6)
Ebmax=250V
Ploss=5W
Rgmax=
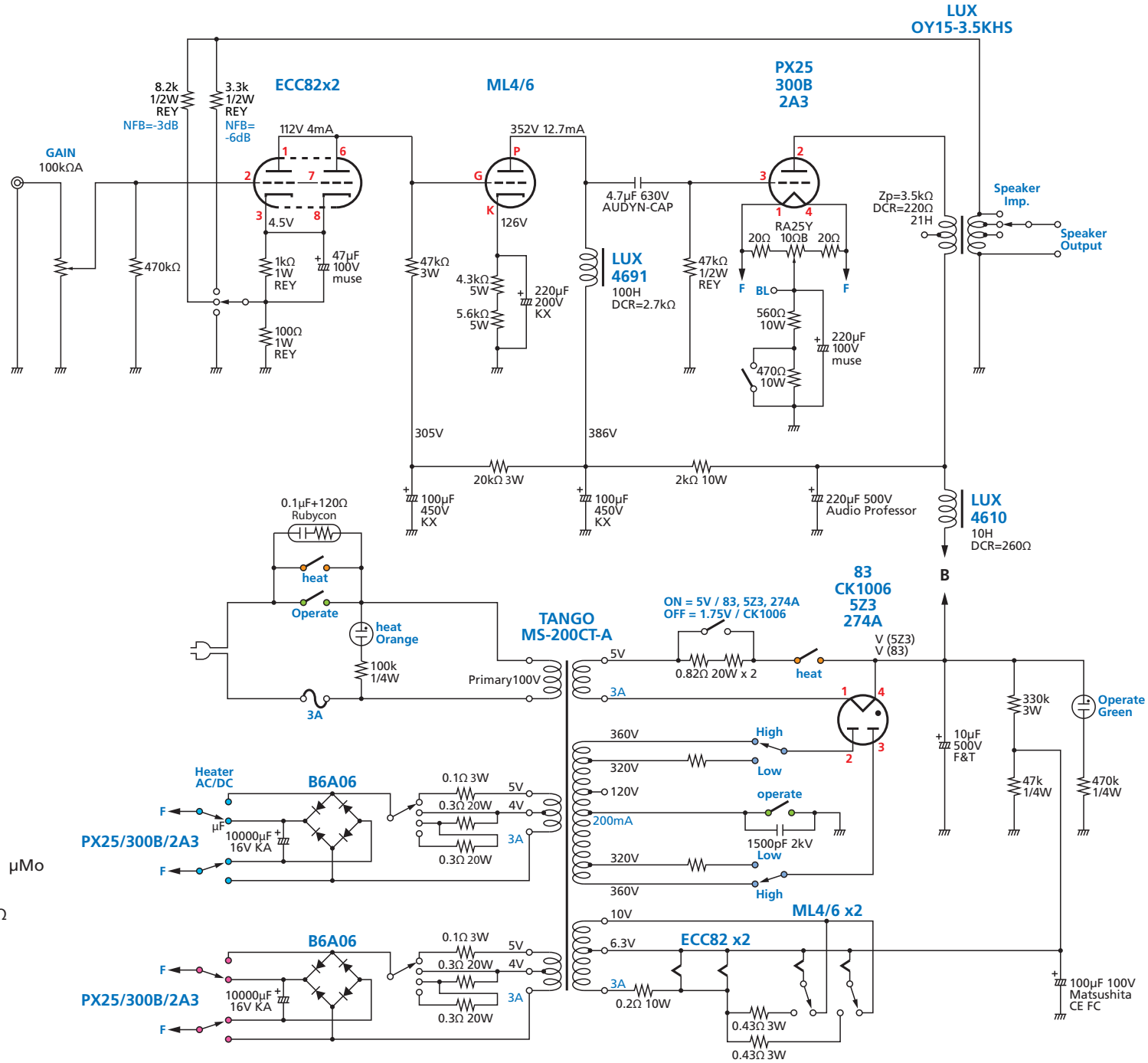
Eb=200V	150V	100V
Ib=16mA	13mA	7mA
Ec1=-11V	-8V	-6V
(Rk=650Ω)		
gm=		4200 μMo
μ= ---	---	12
rp=1265Ω		2860Ω
RL=7kΩ